gMotio

PROMOTAL

gMotio

The gMotio gynaecology couch was designed following 2 years of study with health professionals in Europe and the Middle East. It has been tested by around 20 doctors and 100 patients. gMotio has been designed to provide effective and comfortable treatment, both for the practitioner and for their patients. With its extensive experience, Promotal has created a synergy between two featured products: the Elite gynaecology couch and the eMotio examination couch. gMotio is already considered a must-have gynaecology couch.

WELCOME POSITION

GENERAL EXAMINATION

TRENDELENBURG

EQUALITY OF TREATMENT

MAKE LIFE EASIER FOR YOUR PATIENTS WITH REDUCED MOBILITY WITH:

- Starts at 57cm from the ground
- Electrical support of all patient movements Electrical
- moving footrests (depending on model)

EFFICIENCY

IMPROVE THE FLOW OF YOUR EXAMINATION WITH:

- An integrated leg rest extension for a trendelenburg position (opt)
- 3 programmable positions (9 as accessories)
- Autonomous movements: Press once to change positions
- Intuitive control and its already configured patient start position
- Integrated lighting in the table (depending on model)
- Standard seat rails

ERGONOMICS

ALWAYS PROVIDING THE BEST POSITION FOR YOU AND YOUR PATIENT:

- Precise work on the seat design and foam density
- Variable height from 57 to 118,5cm (with tilt)
- Precise and adjustable tilt, easy speculum placement
- Controls at the right place on the backrest and on the feet
- Built in retractable wheels for short trips

SAFETY

EASY CLEANING OF YOUR COUCH:

- Seamless upholstery
- Removable seat and backrest for easy cleaning
- Cataphoresis treatment of the structure for longevity and hygiene of the product
- Removable ABS tray
- Electrically activated wheels by sustained contact

SAFEGUARD YOUR EXAMINATIONS:

- Safety sensors
- Safety battery
- Dual control

gMotio

STIRRUPS ON CLAMPS

Ref 15620-01

ELECTRICAL FOOT RESTS + INTEGRATED LIGHTING

Ref 15640-01 (pictured above)

ELECTRICAL FOOT RESTS

Ref 15630-01

LEG RESTS ON CLAMPS

Ref 15626-01

GOEPPEL ON CLAMPS

Ref 15624-01

gMotio

- OPTIONS
- ACCESSORIES

Integrated mains socket and equipotential terminal
(EUROPE, UK, US) **Ref. 40400-1**
(DK, IT, AUS, CH) **Ref. 40400-2**

Urology tray
(replacing the std tray)
Ref. 2061-30

Stainless steel tray
(replacing the std tray)
Ref. 15966-01

Leg rest extension
Ref. 15672-01

Manual remote control
(9 programmable positions)
Ref. 15031-10

Pair of coated stirrups
(add x2 clamps 878-12)
Ref. 12850 (+ 2 x 878-12)

Pair of plastic leg rests
(add x2 clamps 878-12)
Ref. 840 (+ 2 x 878-12)

Pair of covers for leg rests
Ref. 861

Pair of goeppels
(add x2 clamps 878-12)
Ref. 845
(+ 2 x 878-12)

Single armrest
(add x1 clamp 878-12)
Ref. 2536
(+ 878-12)

Armrest covert
(for model 2536)
Ref. 2537

Footrest hoop cover
(for models 15630-01 & 15640-01)
Ref. 15861-01

Adjustable headrest
(iQuest 3055-20 and gmotio)
Ref. 30679-01

PVC footrest protection
Ref. 15905-01

PVC seat protection
Ref. 15906-01

PVC extension leg rest protection
Ref. 15907-01

Self-locking serum holder rod 2 hooks
Ref. 2985-01 (+ 878-12)

Serum rod holder 2 hooks with stop
Ref. 985-01 (+ 878-12)

Splash guard
Ref. 12677-01

Colpo support. Zeiss d.38 for gMotio*
Ref. 15840-01
*suppresses autonomous movements

Colpo support. Pivoting Leisegang for gMotio*
Ref. 15810-01
*suppresses autonomous movements

Olympus right colpo support* (elite/elansa 11614-01)
Ref. 15850-01
*suppresses autonomous movements

Olympus left colpo support* (elite/elansa 11614-01)
Ref. 15851-01
*suppresses autonomous movements

Stainless steel backrest rail (pair) 25x10 mm
Ref. 15879-01

Sliding clamp for rail 25x10 mm, ø 16/18 mm
Ref. 878-12

Rotary clamp for rail 25x10 mm
Ref. 879-10

Lamp holder for clamps
Ref. 957 (+ 878-12)

Lamp
(Refer to the documentation)

gMotio

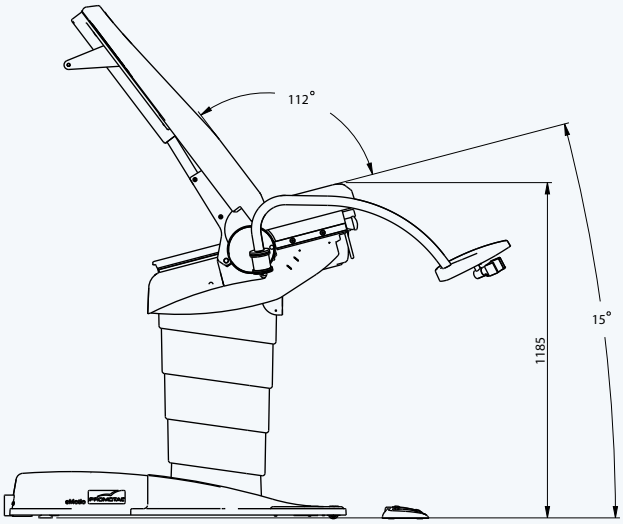

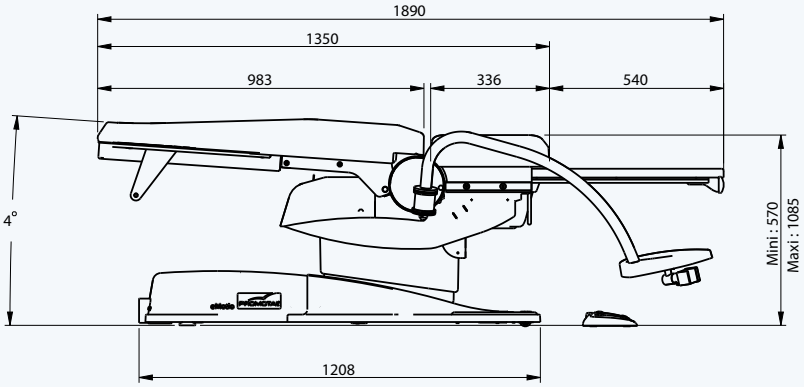

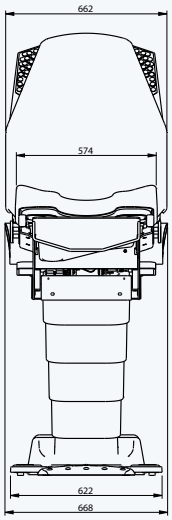

15620-01 / 15624-01 / 15626-01

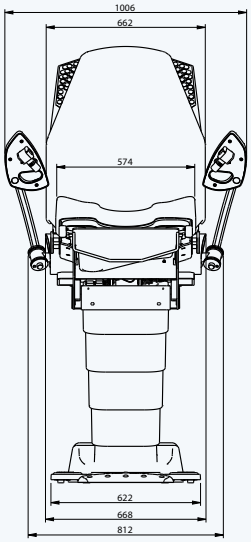

15630-01 / 15640-01

UPHOLSTERY COLOURS

CLASSIC

- 32 - **BLUE**
- 93 - **COTTAGE**
- 35 - **RED**
- 34 - **YELLOW**
- 91 - **WHITE**
- 92 - **MARINE**
- 56 - **DARKNESS**
- 57 - **ANTISTATIC**

VITAMIN

- 64 - **GRAPE**
- 67 - **LAGOON**
- 66 - **SWEET**
- 63 - **CEDRAT**

COSY

- 80 - **SKY**
- 81 - **SEA GREEN**
- 65 - **LILAC**
- 96 - **TIN**
- 82 - **MOUSE GREY**
- 83 - **NATURAL**
- 84 - **CHOCOLATE**

NOMADE www.agence-nomade.re

PROMOTAL®

22, rue de St. Denis de Gastines - **53500 Ernée, FRANCE**
Phone : + 33 (0)2 **43 05 68 95**
Fax : + 33 (0)2 **43 05 72 00**

PROMOTAL.COM